BRAKE SERVICE NOTES

INSTALLATION INFORMATION:

1. SLIDE THE BRAKE OVER THE ROTOR WITH ONE PAD ON EACH SIDE OF ROTOR.
2. ALIGN MOUNTING SLEEVE HOLES IN CALIPER WITH MOUNTING HOLES IN MOUNTING BRACKET.
3. INSERT PAD PINS AND TORQUE TO 30-40 FT. LBS.
4. ATTACH BRAKE LINE USING M10 X 1.5 BANJO PORT.

GENERAL SERVICE INFORMATION:

1. USE DOT 3 OR DOT 4 BRAKE FLUID ONLY FOR THE FOLLOWING BRAKES: 326301021A01, 326301022A01 AND 326301095A01
2. USE MINERAL OIL FOR THE FOLLOWING BRAKES: 326301032A01, 326301033A01, 326301096A01 AND 326301126A01

BRAKE DISASSEMBLY INFORMATION:

1. REMOVE PAD PINS.
2. REMOVE CALIPER FROM MOUNTING FIXTURE.
3. DISCARD WORN STATOR PADS.
4. REMOVE BOOT AND PISTON FROM THE HOUSING AT THE SAME TIME. DO SO BY HOLDING THE BRAKE AGAINST A TABLE SURFACE WITH THE PISTON FACING DOWN AND SLOWLY APPLYING AIR PRESSURE TO THE INLET PORT. ONCE THE PISTON IS OUT OF THE HOUSING, TILT THE PISTON TO ONE SIDE AND PRY THE BOOT OUT OF THE HOUSING. DISCARD THESE PIECES ONLY IF YOU ARE REBUILDING.
5. REMOVE THE SQUARE-RING FROM THE CYLINDER OF THE HOUSING.
6. INSPECT HOUSING BORE. IT MUST BE CLEAN AND RUST FREE. IF RUST IS PRESENT, USE EMORY OR CROCUS CLOTH TO REMOVE. THE SQUARE-RING SEALS AGAINST THE PISTON SURFACE, SO SMALL SCRATCHES AND CAVITIES IN THE BORE WALL WILL NOT AFFECT SEALING PERFORMANCES. HOWEVER, SINCE THE BORE GUIDES THE PISTON MOVEMENT, ANY CYLINDER WALL IMPERFECTION, WHICH CAUSES THE PISTON TO CATCH OR WEDGE IN THE BORE MUST BE TAKEN CARE OF. IF THE PISTON CANNOT BE PROPERLY GUIDED IN THE BORE, REPLACE THE BRAKE.
7. CLEAN ALL PORTS AND MOUNTING SURFACES. WASH HOUSING IN A SOLVENT TO REMOVE ANY DIRT, LOOSE RUST, AND ANY PETROLEUM PRODUCTS.
8. INSPECT BUSHING IN SLIDE MOUNT FOR SIGNS OF WEAR. REPLACE AS NECESSARY.
9. INSPECT ALL OTHER PARTS FOR UNUSUAL WEAR OR RUST. CLEAN OR REPLACE AS NECESSARY.

ASSEMBLY INFORMATION:

IMPORTANT: THERE MAY BE MORE PARTS IN A SERVICE KIT THAN YOUR BRAKE REQUIRES. CHECK THE PARTS LIST CAREFULLY FOR THE EXACT QUANTITY.

NOTE: ALL PARTS MUST BE THOROUGHLY CLEANED PRIOR TO ASSEMBLY.

1. INSERT RUBBER RINGS AND SLEEVES.
2. LUBRICATE SLEEVES WITH A HIGH TEMPERATURE GREASE BEFORE ASSEMBLY.
3. LUBRICATE THE CYLINDER OF THE HOUSING, SQUARE-RING, THE BOOT, AND PISTON WITH BRAKE FLUID BEFORE RE-ASSEMBLY.
4. INSTALL THE SQUARE-RING IN THE GROOVE IN THE CYLINDER BORE FURTHEST FROM THE OPENING.
5. INSTALL A BOOT ONTO THE PISTON. THE SMALL OPENING OF THE BOOT IS TO BE SEATED IN THE GROOVE ON THE FRONT SIDE OF THE PISTON. PULL THE BOOT OVER THE FULL LENGTH OF THE PISTON AND EXTEND THE BOOT BEYOND THE END OF THE PISTON ABOUT 1/4" INCH. START THE BOOT LIP INTO THE CYLINDER GROOVE. USE A VICE OR SHOP PRESS TO SLOWLY MOVE THE PISTON INTO THE CYLINDER UNTIL THE PISTON BOTTOMS OUT. VERIFY THAT THE BOOT HAS PROPERLY SEATED IN THE CYLINDER BORE GROOVE.
6. MOUNT THE BRAKE AS NOTED IN INSTALLATION INFORMATION.

CAUTION:

1. USE DOT 3 OR DOT 4 BRAKE FLUID ONLY FOR THE FOLLOWING BRAKES: 326301021A01, 326301022A01 AND 326301095A01
2. USE MINERAL OIL FOR THE FOLLOWING BRAKES: 326301032A01, 326301033A01, 326301096A01 AND 326301126A01

ITEM	DESCRIPTION	QTY.
	PARTS LIST	
1	BLEEDER SCREW	1
2	PISTON	1
3	SQUARE RING	1
4	PISTON BOOT	1
5	STATOR CLIP	1
6	STATOR ASSEMBLY	2
7	STATOR CLIP	1
8	PROTECTIVE PLUG	1
9	SLEEVE	2
10	RUBBER RING	2
11	RUBBER RING	2
12	HOUSING	1
13	HOUSING	1
14	SLIDE PINS / MOUNTING STUDS	2

LAYOUT NO.

SIM.PARTS

INTERPRET DRAWING ENG. STDS.
UNLESS OTHERWISE SPECIFIED:
ALL DIMENSIONS IN INCHES.
AXLETECH CASTING TOLERANCES STD 0401
FORGING TOLERANCES +.06-.03 DRAFTS 7°±1°
OTHERWISE TOLS.±.015 ON 3-PLACE DECIMALS
±.03 ON 2-PLACE DECIMALS
±1°ON ANGULAR DIMENSIONS
ALL MACHINED INSIDE CORNERS .030 RADIUS.
BREAK ALL SHARP EDGES.
REMOVE ALL BURRS,FINS,FLASH & PROJECTIONS.

FINISH ALLOWANCE
F1 = .03
F2 = .06
F3 = .09
F4 = .12
F5 = .16
F6 = .19
F8 = .25
F10 = .31

REVISIONS

A	RELEASE 940001149P FOR PRODUCTION	104177 05/11/07	ADL PAE
B	REPLACED 326301021A01/326301022A01 WITH 326301095A01, REPLACED 326301032A01/326301033A01 WITH 326301096A01	119081 9-26-16	TE DS
C	UPDATED CALIPER PART NUMBERS	120531 8-3-17	DE DS

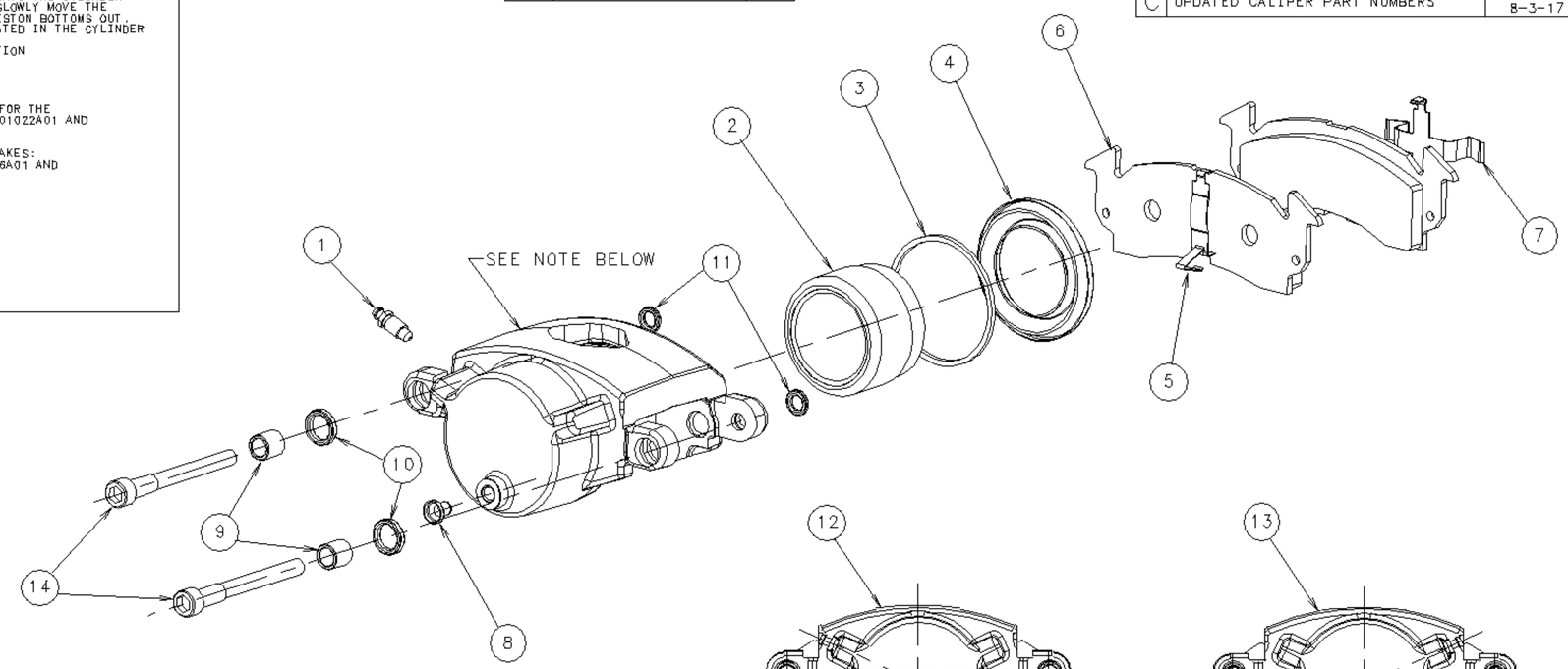

SIX (6) SERVICE KITS AVAILABLE

PART NO.	DESCRIPTION
940001155A01	LINING AND CLIP REPLACEMENT KIT

940001155A01 CONTAINS THE FOLLOWING PARTS

ITEM NO.	DESCRIPTION	QTY
5	STATOR CLIP	1
6	STATOR (LINING) ASSY	2
7	STATOR CLIP	1

PART NO.	DESCRIPTION
940001157A01	PISTON AND SEAL REPLACEMENT KIT

FOR **BRAKE FLUID ONLY**
REF CALIPERS 326301021A01, 326301022A01, AND 326301095A01

940001157A01 CONTAINS THE FOLLOWING PARTS

ITEM NO.	DESCRIPTION	QTY
2	PISTON	1
4	PISTON BOOT	1
3	SQUARE RING	1

PART NO.	DESCRIPTION
940001159A01	PISTON AND SEAL REPLACEMENT KIT

FOR **MINERAL OIL ONLY**
REF CALIPERS 326301032A01, 326301033A01, 326301096A01, AND 326301126A01

940001159A01 CONTAINS THE FOLLOWING PARTS

ITEM NO.	DESCRIPTION	QTY
2	PISTON	1
4	PISTON BOOT	1
3	SQUARE RING	1

PART NO.	DESCRIPTION
940001156A01	BUSHING AND MOUNTING STUD REPLACEMENT KIT

940001156A01 CONTAINS THE FOLLOWING PARTS

ITEM NO.	DESCRIPTION	QTY
9	BUSHING (SLEEVE)	2
10	RUBBER RING	2
11	RUBBER RING	2
14	SLIDE PIN / MOUNTING STUDS	2

PART NO.	DESCRIPTION
940001158A01	SEAL REPLACEMENT KIT

FOR **BRAKE FLUID ONLY**
REF CALIPERS 326301021A01, 326301022A01, AND 326301095A01

940001158A01 CONTAINS THE FOLLOWING PARTS

ITEM NO.	DESCRIPTION	QTY
4	PISTON BOOT	1
3	SQUARE RING	1

PART NO.	DESCRIPTION
940001160A01	SEAL REPLACEMENT KIT

FOR **MINERAL OIL ONLY**
REF CALIPERS 326301032A01, 326301033A01, 326301096A01, AND 326301126A01

940001160A01 CONTAINS THE FOLLOWING PARTS

ITEM NO.	DESCRIPTION	QTY
4	PISTON BOOT	1
3	SQUARE RING	1

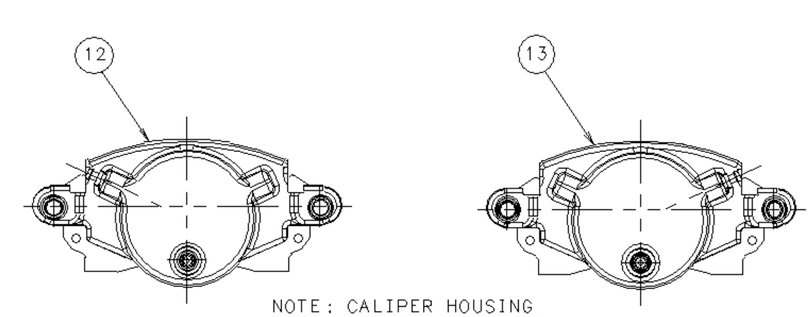

NOTE: CALIPER HOUSING PART NUMBERS ARE RELATIVE TO BLEEDER SCREW LOCATION.

NEW CALIPERS 326301095A01, 326301096A01, AND 326301126A01 ARE UNHANDED WITH TWO BLEEDERS

NOTES:
THIS DRAWING PROVIDES GENERAL GUIDELINES AND ASSEMBLY INFORMATION. COMPONENT FEATURES ARE GENERIC AND MAY NOT REFLECT EXACT GEOMETRY.

DO NOT CHANGE MANUALLY

2D CAD CENTER

APPLY SPECIFIED AXLETECH MARKINGS PER ENGINEERING STANDARD 4-66897

THIS PRINT IS LOANED ON A CONFIDENTIAL BASIS SUBJECT TO RETURN UPON DEMAND BY AXLETECH AND NOTHING HEREON MAY BE REPRODUCED, USED OR DISCLOSED IN WHOLE OR IN PART WITHOUT THE PRIOR WRITTEN PERMISSION OF AXLETECH

MATERIAL
PROCESS
INQUIRY NO.
WEIGHT RGH./FIN.
1 2 3 4 IN. 10THS.
10 20 30 40 50 60 70 80 90 100MM

APPROVED			DRAWN BY	CHECKED BY	3RD ANGLE PROJECTION
PROJ.ENG.	MATERIAL	SPECIAL			
LANGLITZ			PAE 05/11/07	ADL 05/11/07	

C.R./T.E. NO. OHP-0548-AO
APP. NO.
ORIGINAL FOR TA267HDB
SCALE

RELEASE	PART/DWG NO.	
104177	940001149P	EDC
	NAME: CALIPER-SERVICE INFORMATION	ENG DESC CODE
DRAWING SIZE: D	AxleTech International	INCH
DESIGN CONTROL GROUP: OHP-OSH	PART NO. 940001149P	